ASSEMBLY INSTRUCTION

A X 1

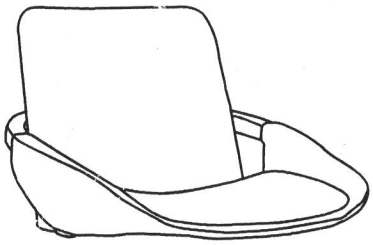

B X 1

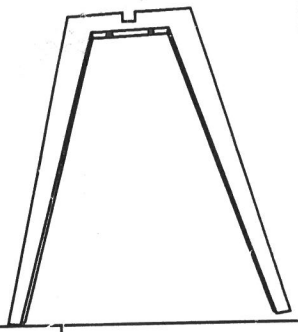

C X 1

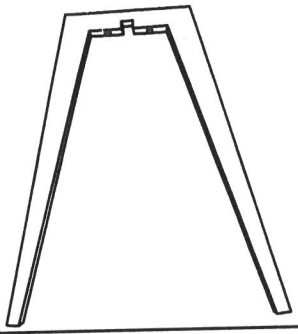

D X 1

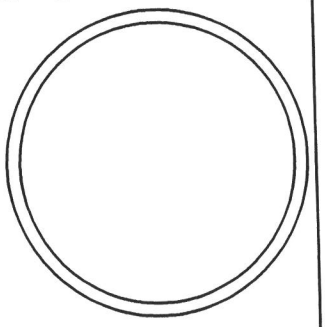

E X 1

M5

F X 1

M4

G X 4

H X 4

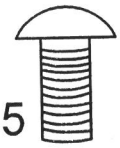

M6*45

I X 4

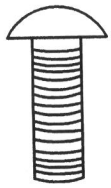

M6*60

①

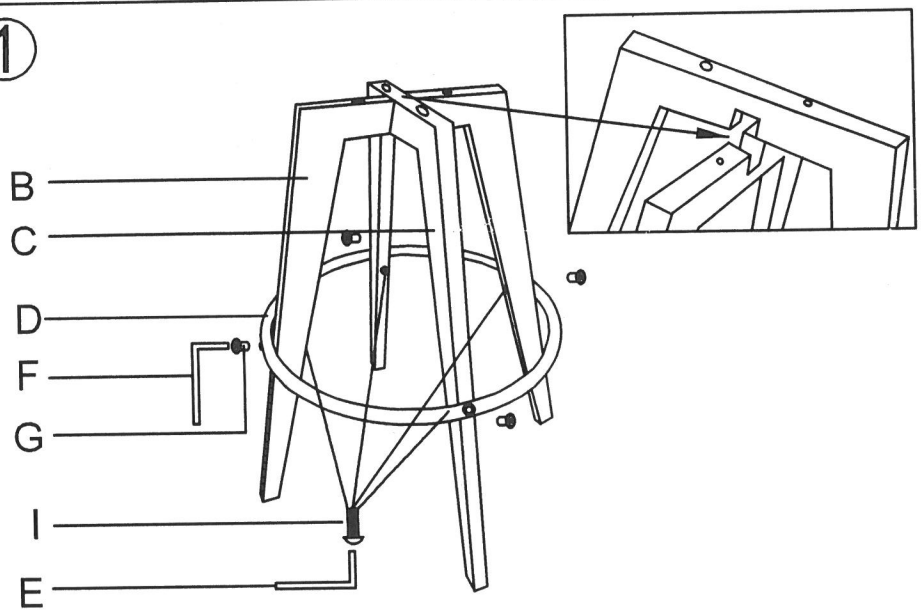

②

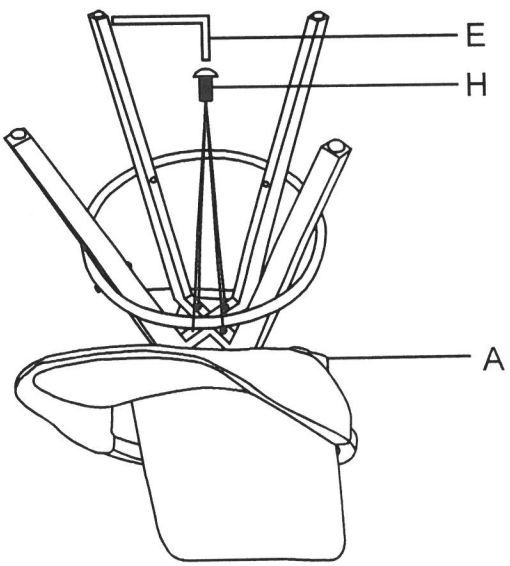
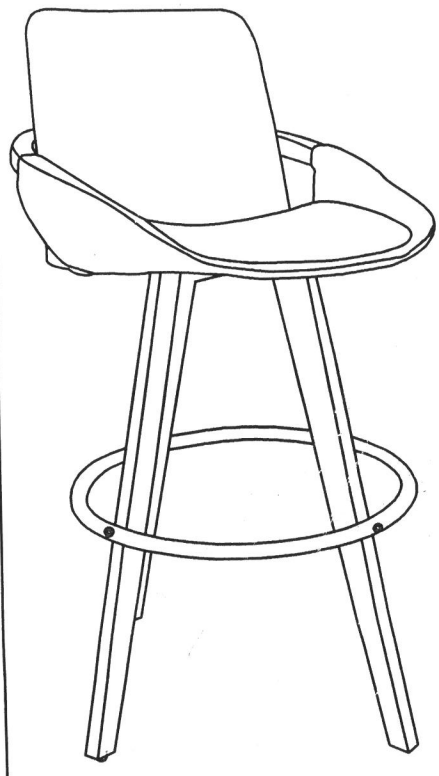
③